ATMEGA328
ATMEGA328
ATMEGA328
ATMEGA328
ULN2803A
ULN2803A
ULN2803A
ULN2803A
ATMEGA8
ATMEGA8
ATMEGA8

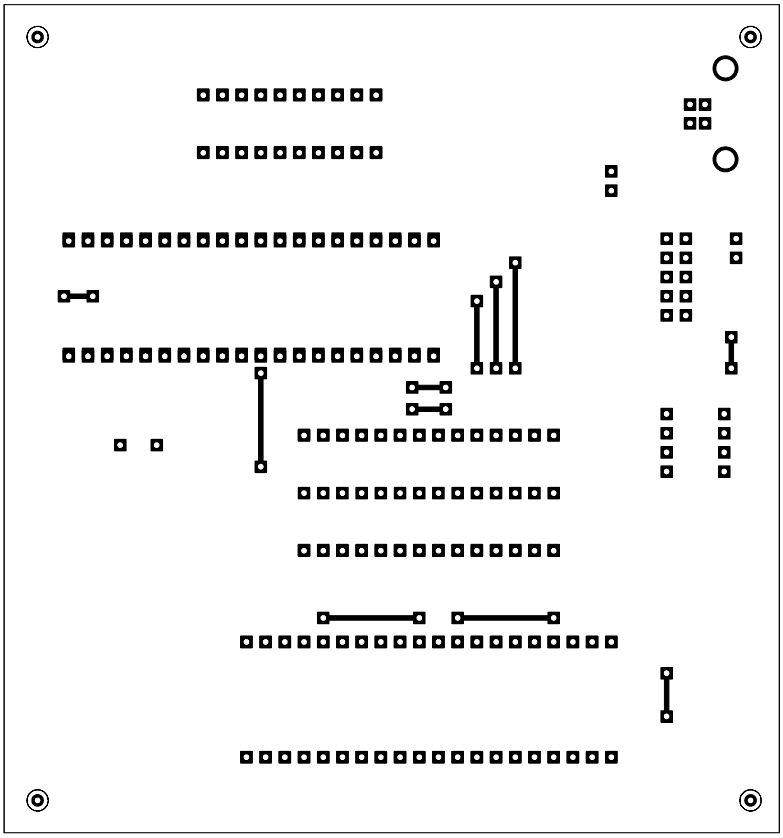

C1
100u
C2
100u
C3
100u
C4
100u
C5
100u
C6
100u
C7
22pF
C8
100u
R1
1k0
R2
100u

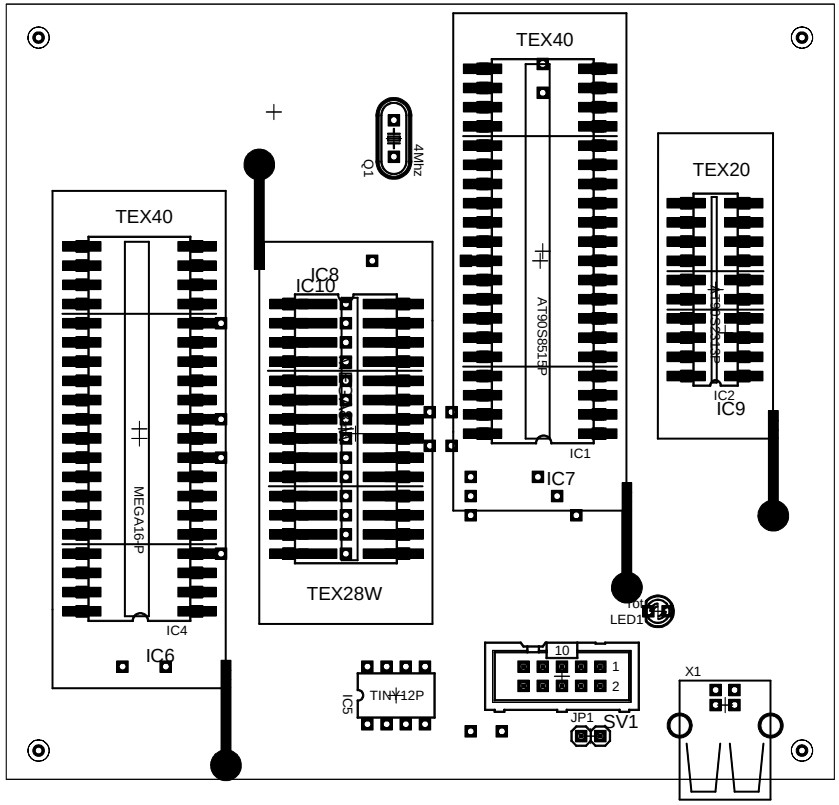
TEX40
TEX20
TEX40
4MHz
Q1
IC8
IC10
AT90S8515P
IC1
IC7
IC2
IC9
MEGA16P
IC4
IC6
TEX28W
LED1
10
1
2
X1
TINY12P
IC5
JP1
SV1